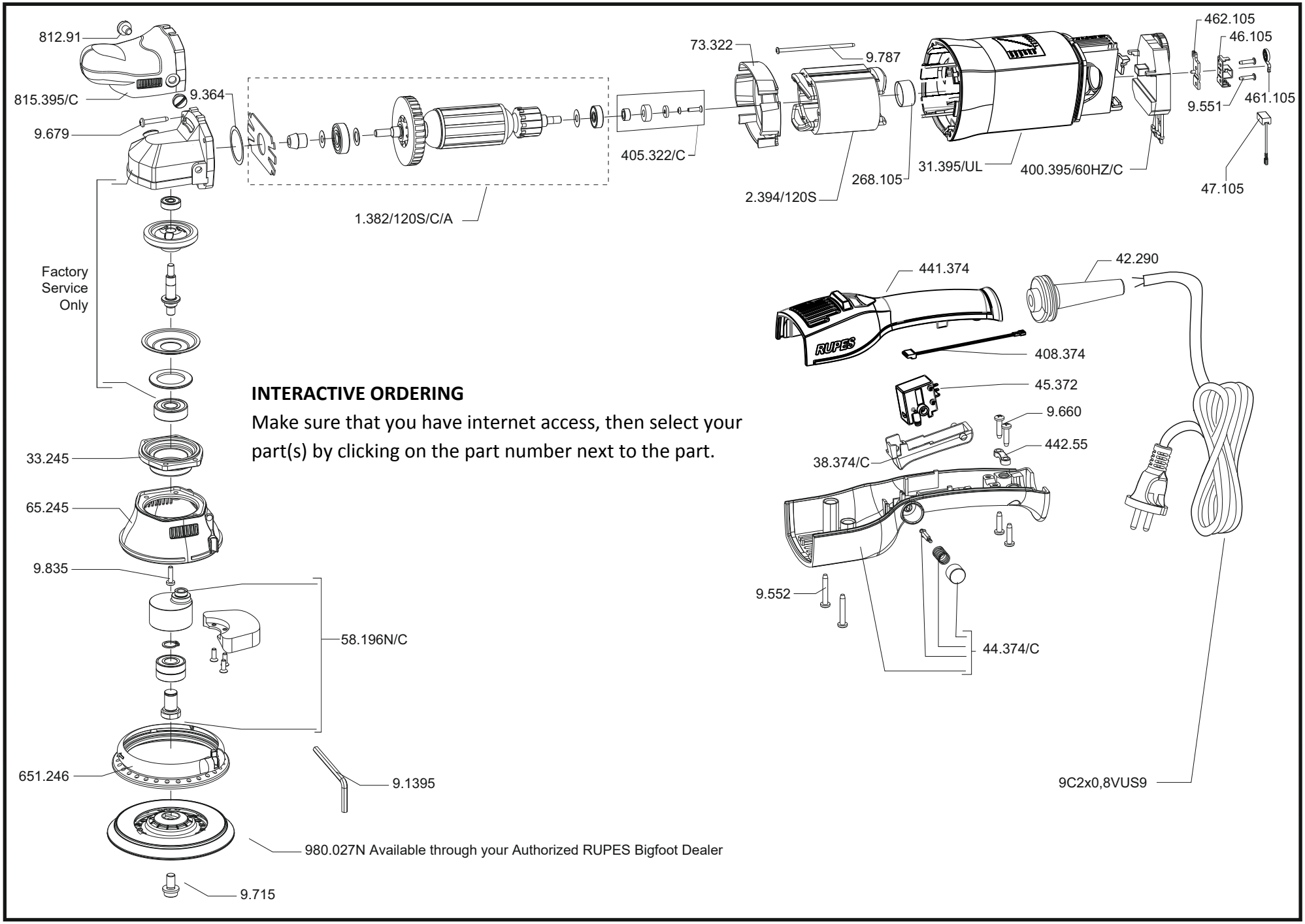

INTERACTIVE ORDERING

Make sure that you have internet access, then select your part(s) by clicking on the part number next to the part.

RUPES

LUCIDATRICE ROTORBITALI
RANDOM-ORBITAL POLISHER

LHR15II

REV 2020.01.10