RUPES®

i-BRID NANO LONG NECK
i-BRID NANO SHORT NECK

**HR81ML**
**HR81M**

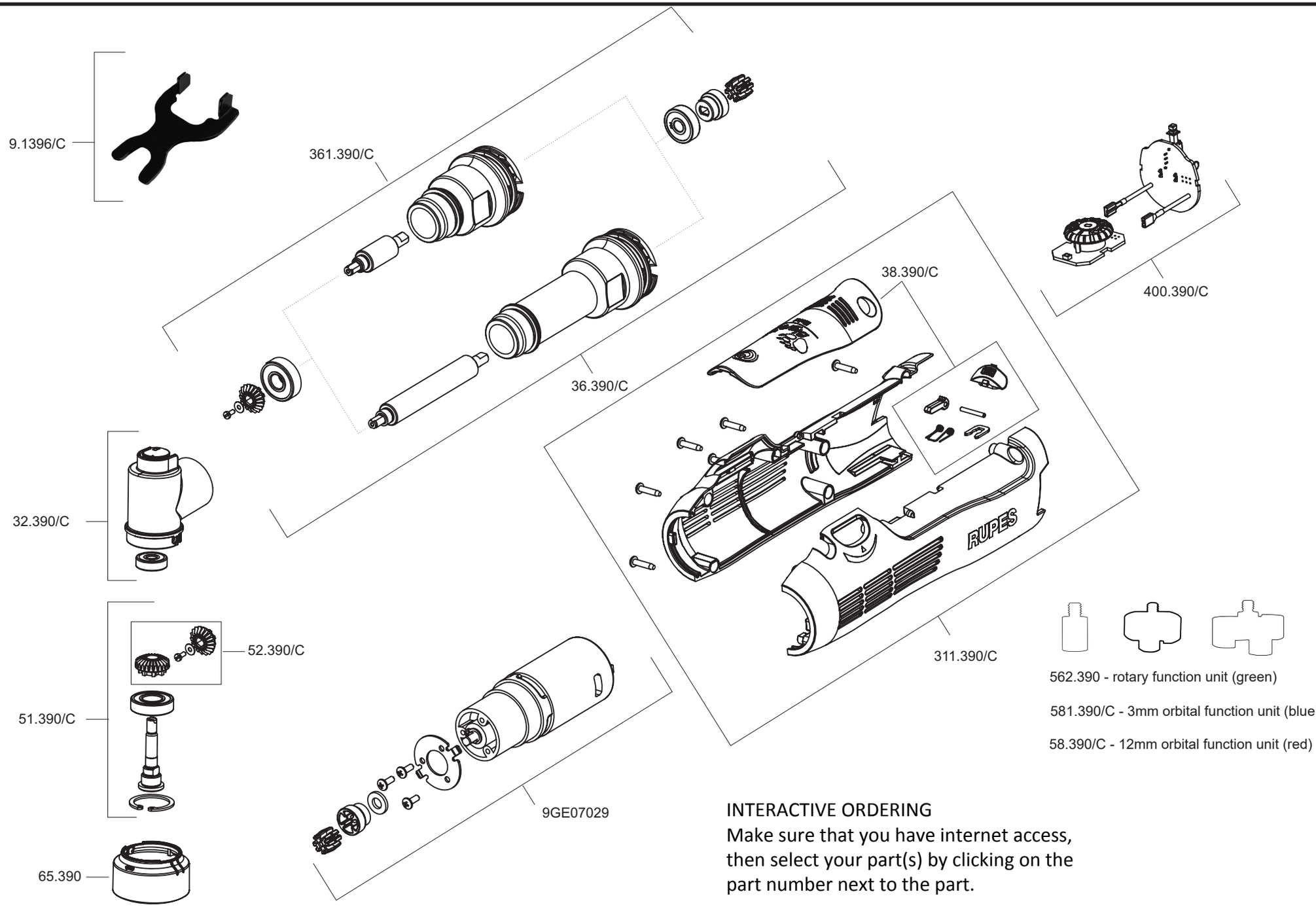


INTERACTIVE ORDERING
Make sure that you have internet access, then select your part(s) by clicking on the part number next to the part.

06/2017